DURA-VANE II

Submittal

JDVB 14 20 & 24
Dura-Vane II Architectural
Copper/Aluminum and
Steel Elements

☐ **JDVB Slip Jointed Enclosure**

Specification

ENCLOSURE:

STYLE: Dura-Vane II
OUTLET: Extruded Aluminum
Pencil Proof

LENGTHS: 2'0" thru 8'0" in 6" Increments
MAT'L: ☐ 16 Ga. CRS (Std)
☐ 14 Ga. CRS (Opt'l)
☐ 16 Ga. Stainless Steel (Opt'l)
☐ 14 Ga. Stainless Steel (Opt'l)
☐ 14 Ga. Aluminum (Opt'l)
☐ 12 Ga. Aluminum (Opt'l)
HEIGHT: ☐ 14"
☐ 20"
☐ 24"
FINISH ☐ Baked Powder (Std)
☐ Baked Metallic (Opt'l)

ACCESSORIES:

☐ JDVB Overlapping Type
All accessories have finger tabs at the bottom for easy installation.

ELEMENT:

TYPE: ☐ Cu/Al (Mechanically Expanded)
LENGTHS: 2'0" thru 12'6" in 1" Increments for 1" & 1-1/4" Cu.
2'0" thru 8'0" in 1" Increments for 3/4" Cu.

One End Flared (Std)

TYPE: ☐ IPS Steel (Mechanically Expanded)
LENGTHS: 2'0" thru 12'6" in 1" Increments
☐ NPT Thread both Ends (Std)
☐ Beveled Ends for Field Weld

See Catalog for Working Pressures

BACKPLATE:

TYPE: ☐ Partial B/P
LENGTHS: 8'0" Only
MAT'L: ☐ 20 Ga. Prepainted (Std)
☐ 18 Ga. Galvannealed (Opt'l)

☐ Full Ht. B/P (Opt'l)
2'0" thru 8'0" in 6" increments
☐ 20 Ga. Galvannealed (Opt'l)
☐ 20 Ga. Painted (Opt'l)
☐ 18 Ga. Painted (Opt'l)

AIRSEAL:

☐ 1/8" x 3/8" Closed Cell (Opt'l)

BRACKETS:

☐ Water Brakt w/B.B.
☐ Steam Brkt w/Brkt Mtd B.B. Hngr

☐ **JDVB 24** ☐ **JDVB 20** ☐ **JDVB 14**

ELEMENT TUBE SIZE	FIN SIZE HEIGHT x WIDTH	CRADLE NUMBER	A
3/4 COPPER	3 5/8 x 4 1/4	2	7"
3/4 COPPER	4 1/4 x 4 1/4	3A	7 3/8
1" COPPER	3 5/8 x 4 1/4	2	7 3/16
1" COPPER	4 1/4 x 4 1/4	2	7 3/16
1 1/4 COPPER	3 5/8 x 4 1/4	2	7 5/16
1 1/4 COPPER	4 1/4 x 4 1/4	2	7 5/16
1" STEEL	4 1/4 x 4 1/4	2	7 5/16
1 1/4 STEEL	4 1/4 x 4 1/4	2	7 1/2
2" STEEL	4 1/4 x 4 1/4	1	7 1/4

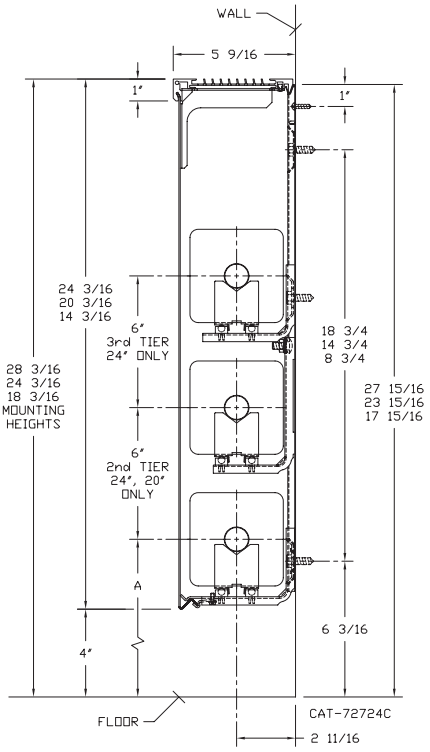

STERLING®
COMMERCIAL HYDRONIC PRODUCTS
MADE IN THE USA
260 North Elm St., Westfield, MA 01085
(413) 564-5535 Fax: (413) 562-8437
www.sterlingheat.com

6/2022

PROJECT: _____ **DATE:** _____
LOCATION: _____
ARCHITECT: _____
ENGINEER: _____
CONTRACTOR: _____
PO NUMBER: _____

STYLES JDVB 14 20 & 24 DURA-VANE II

COPPER/ALUMINUM ELEMENT RATINGS ALL RATINGS ARE BASED ON 3 FPS VELOCITY, 65° EAT					ENCL HEIGHT IN INCHES	TIERS AND CENTERS IN INCHES	MTG. HEIGHT IN INCHES	STEAM 215° FACTOR	HOT WATER (AVG.)								
									200°	190°	180°	170°	160°	150°	140°	130°	120°
TUBE SIZE	CATALOG DESIGNATION	FIN SIZE HEIGHT X WIDTH	FIN PER FT.	FIN THICKNESS IN INCHES					CORRECTION FACTORS FOR AVERAGE WATER TEMPERATURES								
								1.00	0.86	0.78	0.69	0.61	0.53	0.45	.40	.33	.26
3/4″	C3/4-433	3-5/8″ x 4-1/4″	32	.020	14-3/16	1	18-3/16	1360	1170	1060	940	830	720	610	540	450	350
					20-3/16	1	24-3/16	1400	1200	1090	970	850	740	630	560	460	360
					20-3/16	2-6 CL	24-3/16	2220	1910	1730	1530	1350	1180	1000	890	730	580
					24-3/16	1	28-3/16	1425	1230	1110	980	870	760	640	570	470	370
					24-3/16	2-6 CL	28-3/16	2270	1950	1770	1570	1380	1200	1020	910	750	590
					24-3/16	3-6 CL	28-3/16	2610	2240	2040	1800	1590	1380	1170	1040	860	680
3/4″	C3/4-434	3-5/8″ x 4-1/4″	40	.020	14-3/16	1	18-3/16	1620	1390	1260	1120	990	860	730	650	530	420
					20-3/16	1	24-3/16	1710	1470	1330	1180	1040	910	770	680	560	440
					20-3/16	2-6 CL	24-3/16	2390	2060	1860	1650	1460	1270	1080	960	790	620
					24-3/16	1	28-3/16	1800	1550	1400	1240	1100	950	810	720	590	470
					24-3/16	2-6 CL	28-3/16	2490	2140	1940	1720	1520	1320	1120	1000	820	650
					24-3/16	3-6 CL	28-3/16	2840	2440	2220	1960	1730	1510	1280	1140	940	740
3/4″	C3/4-435	3-5/8″ x 4-1/4″	50	.020	14-3/16	1	18-3/16	1780	1530	1390	1230	1090	940	800	710	590	460
					20-3/16	1	24-3/16	1940	1670	1510	1340	1180	1030	870	780	640	500
					20-3/16	2-6 CL	24-3/16	2400	2060	1870	1660	1460	1270	1080	960	790	620
					24-3/16	1	28-3/16	2080	1790	1620	1440	1270	1100	940	830	690	540
					24-3/16	2-6 CL	28-3/16	2530	2180	1970	1750	1540	1340	1140	1010	830	660
					24-3/16	3-6 CL	28-3/16	2860	2460	2230	1970	1740	1520	1290	1140	940	740
1″	C433	3-5/8″ x 4-1/4″	32	.020	14-3/16	1	18-3/16	1410	1210	1100	970	860	750	630	560	470	370
					20-3/16	1	24-3/16	1450	1250	1130	1000	880	770	650	580	480	380
					20-3/16	2-6 CL	24-3/16	2320	2000	1810	1600	1420	1230	1040	930	770	600
					24-3/16	1	28-3/16	1480	1270	1150	1020	900	780	670	590	490	380
					24-3/16	2-6 CL	28-3/16	2410	2070	1880	1660	1470	1280	1080	960	800	630
					24-3/16	3-6 CL	28-3/16	2770	2380	2160	1910	1690	1470	1250	1110	910	720
1″	C434	3-5/8″ x 4-1/4″	40	.020	14-3/16	1	18-3/16	1690	1450	1320	1170	1030	900	760	680	560	440
					20-3/16	1	24-3/16	1800	1550	1400	1240	1100	950	810	720	590	470
					20-3/16	2-6 CL	24-3/16	2510	2160	1960	1730	1530	1330	1130	1000	830	650
					24-3/16	1	28-3/16	1890	1630	1470	1300	1150	1000	850	760	620	490
					24-3/16	2-6 CL	28-3/16	2660	2290	2070	1840	1620	1410	1200	1060	880	690
					24-3/16	3-6 CL	28-3/16	3030	2610	2360	2090	1850	1610	1360	1210	1000	790
1″	C435	3-5/8″ x 4-1/4″	50	.020	14-3/16	1	18-3/16	1850	1590	1440	1280	1130	980	830	740	610	480
					20-3/16	1	24-3/16	2030	1750	1580	1400	1240	1080	910	810	670	530
					20-3/16	2-6 CL	24-3/16	2510	2160	1960	1730	1530	1330	1130	1000	830	650
					24-3/16	1	28-3/16	2170	1870	1690	1500	1320	1150	980	870	720	560
					24-3/16	2-6 CL	28-3/16	2660	2290	2070	1840	1620	1410	1200	1060	880	690
					24-3/16	3-6 CL	28-3/16	3010	2590	2350	2080	1840	1600	1350	1200	990	780
1-1/4″	C1433	3-5/8″ x 4-1/4″	32	.020	14-3/16	1	18-3/16	1380	1190	1080	950	840	730	620	550	460	360
					20-3/16	1	24-3/16	1420	1220	1110	980	870	750	640	570	470	370
					20-3/16	2-6 CL	24-3/16	2280	1960	1780	1570	1390	1210	1030	910	750	590
					24-3/16	1	28-3/16	1450	1250	1130	1000	880	770	650	580	480	380
					24-3/16	2-6 CL	28-3/16	2370	2040	1850	1640	1450	1260	1070	950	780	620
					24-3/16	3-6 CL	28-3/16	2730	2350	2130	1880	1670	1450	1230	1090	900	710
1-1/4″	C1434	3-5/8″ x 4-1/4″	40	.020	14-3/16	1	18-3/16	1660	1430	1290	1150	1010	880	750	660	550	430
					20-3/16	1	24-3/16	1760	1510	1370	1210	1070	930	790	700	580	460
					20-3/16	2-6 CL	24-3/16	2460	2120	1920	1700	1500	1300	1110	980	810	640
					24-3/16	1	28-3/16	1850	1590	1440	1280	1130	980	830	740	610	480
					24-3/16	2-6 CL	28-3/16	2600	2240	2030	1790	1590	1380	1170	1040	860	680
					24-3/16	3-6 CL	28-3/16	2960	2550	2310	2040	1810	1570	1330	1180	980	770
1-1/4″	C1435	3-5/8″ x 4-1/4″	50	.020	14-3/16	1	18-3/16	1760	1510	1370	1210	1070	930	790	700	580	460
					20-3/16	1	24-3/16	1920	1650	1500	1320	1170	1020	860	770	630	500
					20-3/16	2-6 CL	24-3/16	2370	2040	1850	1640	1450	1260	1070	950	780	620
					24-3/16	1	28-3/16	2050	1760	1600	1410	1250	1090	920	820	680	530
					24-3/16	2-6 CL	28-3/16	2500	2150	1950	1720	1530	1330	1130	1000	830	650
					24-3/16	3-6 CL	28-3/16	2820	2430	2200	1950	1720	1490	1270	1130	930	730
3/4″	C3/4-43	4-1/4″ SQ.	32	.020	14-3/16	1	18-3/16	1470	1260	1150	1010	900	780	660	590	490	380
					20-3/16	1	24-3/16	1540	1320	1200	1060	940	820	690	620	510	400
					20-3/16	2-6 CL	24-3/16	2310	1990	1800	1590	1410	1220	1040	920	760	600
					24-3/16	1	28-3/16	1570	1350	1220	1080	960	830	710	630	520	410
					24-3/16	2-6 CL	28-3/16	2410	2070	1880	1660	1470	1280	1080	960	800	630
					24-3/16	3-6 CL	28-3/16	2770	2380	2160	1910	1690	1470	1250	1110	910	720
3/4″	C3/4-44	4-1/4″ SQ.	40	.020	14-3/16	1	18-3/16	1840	1580	1440	1270	1120	980	830	740	610	480
					20-3/16	1	24-3/16	1950	1680	1520	1350	1190	1030	880	780	640	510
					20-3/16	2-6 CL	24-3/16	2660	2290	2070	1840	1620	1410	1200	1060	880	690
					24-3/16	1	28-3/16	2070	1780	1610	1430	1260	1100	930	830	680	540
					24-3/16	2-6 CL	28-3/16	2580	2220	2010	1780	1570	1370	1160	1030	850	670
					24-3/16	3-6 CL	28-3/16	2940	2530	2290	2030	1790	1560	1320	1180	970	760
3/4″	C3/4-45	4-1/4″ SQ.	50	.020	14-3/16	1	18-3/16	1870	1610	1460	1290	1140	990	840	750	620	490
					20-3/16	1	24-3/16	2050	1760	1600	1410	1250	1090	920	820	680	530
					20-3/16	2-6 CL	24-3/16	2480	2130	1930	1710	1510	1310	1120	990	820	640
					24-3/16	1	28-3/16	2200	1890	1720	1520	1340	1170	990	880	730	570
					24-3/16	2-6 CL	28-3/16	2670	2300	2080	1840	1630	1420	1200	1070	880	690
					24-3/16	3-6 CL	28-3/16	3020	2600	2360	2080	1840	1600	1360	1210	1000	790

STYLES JDVB 14 20 & 24 DURA-VANE II

COPPER/ALUMINUM ELEMENT RATINGS ALL RATINGS ARE BASED ON 3 FPS VELOCITY, 65° EAT									HOT WATER (AVG.)								
									200°	190°	180°	170°	160°	150°	140°	130°	120°
									CORRECTION FACTORS FOR AVERAGE WATER TEMPERATURES								
TUBE SIZE	CATALOG DESIGNATION	FIN SIZE HEIGHT X WIDTH	FIN PER FT.	FIN THICKNESS IN INCHES	ENCL HEIGHT IN INCHES	TIERS AND CENTERS IN INCHES	MTG. HEIGHT IN INCHES	STEAM 215° FACTOR	1.00	0.86	0.78	0.69	0.61	0.53	0.45	.40	.33	.26
1″	C43	4-1/4″ SQ.	32	.020	14-3/16	1	18-3/16	1470	1260	1150	1010	900	780	660	590	490	380
					20-3/16	1	24-3/16	1540	1320	1200	1060	940	820	690	620	510	400
					20-3/16	2-6 CL	24-3/16	2340	2010	1830	1610	1430	1240	1050	940	770	610
					24-3/16	1	28-3/16	1580	1360	1230	1090	960	840	710	630	520	410
					24-3/16	2-6 CL	28-3/16	2440	2100	1900	1680	1490	1290	1100	980	810	630
					24-3/16	3-6 CL	28-3/16	2810	2420	2190	1940	1710	1490	1260	1120	930	730
1″	C44	4-1/4″ SQ.	40	.020	14-3/16	1	18-3/16	1720	1480	1340	1190	1050	910	770	690	570	450
					20-3/16	1	24-3/16	1810	1560	1410	1250	1100	960	810	720	600	470
					20-3/16	2-6 CL	24-3/16	2510	2160	1960	1730	1530	1330	1130	1000	830	650
					24-3/16	1	28-3/16	1920	1650	1500	1320	1170	1020	860	770	630	500
					24-3/16	2-6 CL	28-3/16	2600	2240	2030	1790	1590	1380	1170	1040	860	680
					24-3/16	3-6 CL	28-3/16	2960	2550	2310	2040	1810	1570	1330	1180	980	770
1″	C45	4-1/4″ SQ.	50	.020	14-3/16	1	18-3/16	1900	1630	1480	1310	1160	1010	860	760	630	490
					20-3/16	1	24-3/16	2090	1800	1630	1440	1270	1110	940	840	690	540
					20-3/16	2-6 CL	24-3/16	2510	2160	1960	1730	1530	1330	1130	1000	830	650
					24-3/16	1	28-3/16	2250	1940	1760	1550	1370	1190	1010	900	740	590
					24-3/16	2-6 CL	28-3/16	2710	2330	2110	1870	1650	1440	1220	1080	890	700
					24-3/16	3-6 CL	28-3/16	3060	2630	2390	2110	1870	1620	1380	1220	1010	800
1-1/4″	C143	4-1/4″ SQ.	32	.020	14-3/16	1	18-3/16	1440	1240	1120	990	880	760	650	580	480	370
					20-3/16	1	24-3/16	1510	1300	1180	1040	920	800	680	600	500	390
					20-3/16	2-6 CL	24-3/16	2300	1980	1790	1590	1400	1220	1040	920	760	600
					24-3/16	1	28-3/16	1550	1330	1210	1070	950	820	700	620	510	400
					24-3/16	2-6 CL	28-3/16	2390	2060	1860	1650	1460	1270	1080	960	790	620
					24-3/16	3-6 CL	28-3/16	2750	2370	2150	1900	1680	1460	1240	1100	910	720
1-1/4″	C144	4-1/4″ SQ.	40	.020	14-3/16	1	18-3/16	1690	1450	1320	1170	1030	900	760	680	560	440
					20-3/16	1	24-3/16	1780	1530	1390	1230	1090	940	800	710	590	460
					20-3/16	2-6 CL	24-3/16	2460	2120	1920	1700	1500	1300	1110	980	810	640
					24-3/16	1	28-3/16	1890	1630	1470	1300	1150	1000	850	760	620	490
					24-3/16	2-6 CL	28-3/16	2550	2190	1990	1760	1560	1350	1150	1020	840	660
					24-3/16	3-6 CL	28-3/16	2910	2500	2270	2010	1780	1540	1310	1160	960	760
1-1/4″	C145	4-1/4″ SQ.	50	.020	14-3/16	1	18-3/16	1870	1610	1460	1290	1140	990	840	750	620	490
					20-3/16	1	24-3/16	2050	1760	1600	1410	1250	1090	920	820	680	530
					20-3/16	2-6 CL	24-3/16	2460	2120	1920	1700	1500	1300	1110	980	810	640
					24-3/16	1	28-3/16	2210	1900	1720	1520	1350	1170	990	880	730	570
					24-3/16	2-6 CL	28-3/16	2650	2280	2070	1830	1620	1400	1190	1060	870	690
					24-3/16	3-6 CL	28-3/16	2990	2570	2330	2060	1820	1580	1350	1200	990	780

Copper tube furnished flared one end standard.

STYLES JDVB 14 20 & 24 DURA-VANE II

STEEL ELEMENT RATINGS ALL RATINGS ARE BASED ON 3 FPS VELOCITY, 65° EAT					ENCL HEIGHT IN INCHES	TIERS AND CENTERS IN INCHES	MTG. HEIGHT IN INCHES	STEAM 215° FACTOR	HOT WATER (AVG.)								
									200°	190°	180°	170°	160°	150°	140°	130°	120°
TUBE SIZE	CATALOG DESIGNATION	FIN SIZE HEIGHT X WIDTH	FIN PER FT.	FIN THICKNESS IN INCHES					CORRECTION FACTORS FOR AVERAGE WATER TEMPERATURES								
								1.00	0.86	0.78	0.69	0.61	0.53	0.45	.40	.33	.26
1″	S43	4-1/4″SQ.	32	.032	14-3/16	1	18-3/16	1210	1040	940	830	740	640	540	480	400	310
					20-3/16	1	24-3/16	1270	1090	990	880	770	670	570	510	420	330
					20-3/16	2-6 CL	24-3/16	2080	1790	1620	1440	1270	1100	940	830	690	540
					24-3/16	1	28-3/16	1310	1130	1020	900	800	690	590	520	430	340
					24-3/16	2-6 CL	28-3/16	2120	1820	1650	1460	1290	1120	950	850	700	550
					24-3/16	3-6 CL	28-3/16	2440	2100	1900	1680	1490	1290	1100	980	810	630
1″	S44	4-1/4″SQ.	40	.032	14-3/16	1	18-3/16	1440	1240	1120	990	880	760	650	580	480	370
					20-3/16	1	24-3/16	1530	1320	1190	1060	930	810	690	610	500	400
					20-3/16	2-6 CL	24-3/16	2330	2000	1820	1610	1420	1230	1050	930	770	610
					24-3/16	1	28-3/16	1600	1380	1250	1100	980	850	720	640	530	420
					24-3/16	2-6 CL	28-3/16	2395	2060	1870	1650	1460	1270	1080	960	790	620
					24-3/16	3-6 CL	28-3/16	2730	2350	2130	1880	1670	1450	1230	1090	900	710
1″	S45	4-1/4″SQ.	50	.032	14-3/16	1	18-3/16	1490	1280	1160	1030	910	790	670	600	490	390
					20-3/16	1	24-3/16	1565	1350	1220	1080	950	830	700	630	520	410
					20-3/16	2-6 CL	24-3/16	2285	1970	1780	1580	1390	1210	1030	910	750	590
					24-3/16	1	28-3/16	1620	1390	1260	1120	990	860	730	650	530	420
					24-3/16	2-6 CL	28-3/16	2320	2000	1810	1600	1420	1230	1040	930	770	600
					24-3/16	3-6 CL	28-3/16	2620	2250	2040	1810	1600	1390	1180	1050	860	680
1-1/4″	S143	4-1/4″SQ.	32	.032	14-3/16	1	18-3/16	1110	950	870	770	680	590	500	440	370	290
					20-3/16	1	24-3/16	1170	1010	910	810	710	620	530	470	390	300
					20-3/16	2-6 CL	24-3/16	1910	1640	1490	1320	1170	1010	860	760	630	500
					24-3/16	1	28-3/16	1200	1030	940	830	730	640	540	480	400	310
					24-3/16	2-6 CL	28-3/16	1940	1670	1510	1340	1180	1030	870	780	640	500
					24-3/16	3-6 CL	28-3/16	2230	1920	1740	1540	1360	1180	1000	890	740	580
1-1/4″	S144	4-1/4″SQ.	40	.032	14-3/16	1	18-3/16	1430	1230	1120	990	870	760	640	570	470	370
					20-3/16	1	24-3/16	1520	1310	1190	1050	930	810	680	610	500	400
					20-3/16	2-6 CL	24-3/16	2240	1930	1750	1550	1370	1190	1010	900	740	580
					24-3/16	1	28-3/16	1590	1370	1240	1100	970	840	720	640	520	410
					24-3/16	2-6 CL	28-3/16	2300	1980	1790	1590	1400	1220	1040	920	760	600
					24-3/16	3-6 CL	28-3/16	2620	2250	2040	1810	1600	1390	1180	1050	860	680
1-1/4″	S145	4-1/4″SQ.	50	.032	14-3/16	1	18-3/16	1460	1260	1140	1010	890	770	660	580	480	380
					20-3/16	1	24-3/16	1535	1320	1200	1060	940	810	690	610	510	400
					20-3/16	2-6 CL	24-3/16	2240	1930	1750	1550	1370	1190	1010	900	740	580
					24-3/16	1	28-3/16	1595	1370	1240	1100	970	850	720	640	530	410
					24-3/16	2-6 CL	28-3/16	2275	1960	1770	1570	1390	1210	1020	910	750	590
					24-3/16	3-6 CL	28-3/16	2570	2210	2000	1770	1570	1360	1160	1030	850	670
2″	S242	4-1/4″SQ.	25	.032	14-3/16	1	18-3/16	1090	940	850	750	660	580	490	440	360	280
					20-3/16	1	24-3/16	1130	970	880	780	690	600	510	450	370	290
					20-3/16	2-6 CL	24-3/16	1830	1570	1430	1260	1120	970	820	730	600	480
					24-3/16	1	28-3/16	1150	990	900	790	700	610	520	460	380	300
					24-3/16	2-6 CL	28-3/16	1850	1590	1440	1280	1130	980	830	740	610	480
					24-3/16	3-6 CL	28-3/16	2130	1830	1660	1470	1300	1130	960	850	700	550
2″	S243	4-1/4″SQ.	32	.032	14-3/16	1	18-3/16	1290	1110	1010	890	790	680	580	520	430	340
					20-3/16	1	24-3/16	1330	1140	1040	920	810	700	600	530	440	350
					20-3/16	2-6 CL	24-3/16	2030	1750	1580	1400	1240	1080	910	810	670	530
					24-3/16	1	28-3/16	1380	1190	1080	950	840	730	620	550	460	360
					24-3/16	2-6 CL	28-3/16	2060	1770	1610	1420	1260	1090	930	820	680	540
					24-3/16	3-6 CL	28-3/16	2370	2040	1850	1640	1450	1260	1070	950	780	620

NPT threads furnished on steel elements. Please use domestic fittings for proper installation.

"B" OFFSET

ELEMENT TUBE SIZE	FIN SIZE HEIGHT × WIDTH	CRADLE NUMBER	A MIN	A MAX
3/4 COPPER	3 5/8 × 4 1/4	2	7 3/8	8 3/4
	4 1/4 × 4 1/4	3A	7 11/16	9 1/16
1″ COPPER	3 5/8 × 4 1/4	2	7 1/2	8 7/8
	4 1/4 × 4 1/4			
1 1/4 COPPER	3 5/8 × 4 1/4	2	7 5/8	9″
	4 1/4 × 4 1/4			
1″ STEEL	4 1/4 × 4 1/4	2	7 5/8	9″
1 1/4 STEEL	4 1/4 × 4 1/4	2	7 7/8	9 1/4
2″ STEEL	4 1/4 × 4 1/4	1	7 5/8	9″

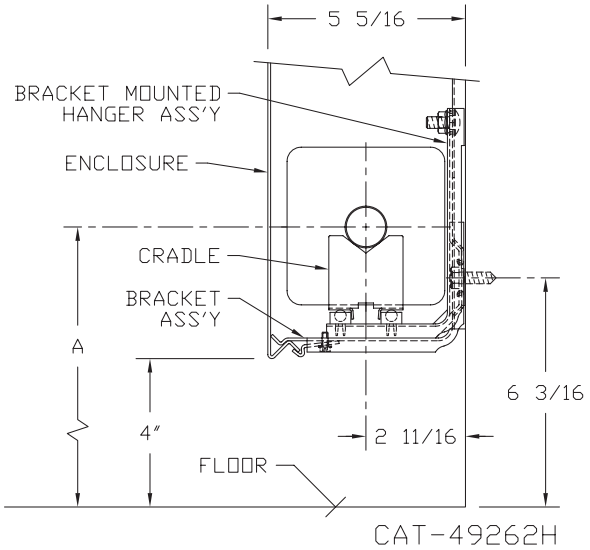

DESIGN DATA

COMMERCIAL FINNED TUBE CHARTS FOR RATING CORRECTIONS

For assistance with ratings and selection, please use our online Specifier.

CORRECTION FACTORS FOR WATER TEMPERATURES AND AIR TEMPERATURES OTHER THAN STANDARD

AVERAGE WATER TEMP. °F	ENTERING AIR TEMPERATURE °F														
	45	55	STD 65	70	75	80	85	90	95	100	110	120	130	140	150
90	.19	.13	.11	.06											
100	.25	.19	.15	.11	.08	.06									
110	.31	.25	.20	.16	.13	.11	.08	.06							
120	.38	.31	.26	.21	.19	.16	.13	.11	.08	.06					
130	.45	.38	.33	.28	.25	.21	.19	.16	.13	.11	.06				
140	.53	.45	.40	.34	.31	.28	.25	.21	.19	.16	.11	.06			
150	.61	.53	.45	.41	.38	.34	.31	.28	.25	.21	.16	.11	.06		
160	.69	.61	.53	.49	.45	.41	.38	.34	.31	.28	.21	.16	.11	.06	
170	.77	.69	.61	.57	.53	.49	.45	.41	.38	.34	.28	.21	.16	.11	.06
180	.86	.77	.69	.65	.61	.57	.53	.49	.45	.41	.34	.28	.21	.16	.11
190	.95	.86	.78	.73	.69	.65	.61	.57	.53	.49	.41	.34	.28	.21	.16
200	1.05	.95	.86	.82	.77	.73	.69	.65	.61	.57	.49	.41	.34	.28	.21
210	1.14	1.05	.95	.91	.86	.82	.77	.73	.69	.65	.57	.49	.41	.34	.28
▶ 215 (STD.)	1.19	1.09	1.00	.95	.91	.86	.82	.77	.73	.69	.61	.53	.45	.38	.31
220	1.24	1.14	1.05	1.00	.95	.91	.86	.82	.77	.73	.65	.57	.49	.41	.34
230	1.34	1.24	1.14	1.09	1.05	1.00	.95	.91	.86	.82	.73	.65	.57	.49	.41
240	1.44	1.34	1.25	1.19	1.14	1.09	1.05	1.00	.95	.91	.82	.73	.65	.57	.49
250	1.55	1.44	1.34	1.29	1.24	1.19	1.14	1.09	1.05	1.00	.91	.82	.73	.65	.57
260	1.66	1.55	1.44	1.39	1.34	1.29	1.24	1.19	1.14	1.09	1.00	.91	.82	.73	.65
270	1.76	1.66	1.55	1.50	1.44	1.39	1.34	1.29	1.24	1.19	1.09	1.00	.91	.82	.73
280	1.87	1.76	1.66	1.60	1.55	1.50	1.44	1.39	1.34	1.29	1.19	1.09	1.00	.91	.82
290	1.99	1.87	1.76	1.71	1.66	1.60	1.55	1.50	1.44	1.39	1.29	1.19	1.09	1.00	.91
300	2.10	1.99	1.87	1.82	1.76	1.71	1.66	1.60	1.55	1.50	1.39	1.29	1.19	1.09	1.00

CORRECTION FACTORS FOR STEAM PRESSURES AND AIR TEMPERATURES OTHER THAN STANDARD

STEAM PRESSURE		ENTERING AIR TEMPERATURE °F														
GAUGE	ABS. PSI	TEMP. °F	45	55	STD 65	70	75	80	85	90	100	110	120	130	140	150
(VAC) 15" HG	7.32	178.9	0.90	0.80	0.70	0.65	0.60	0.56	0.51	0.45	0.39	0.32	0.25	0.18	0.13	0.08
(VAC) 10"	9.78	192.2	1.02	0.91	0.81	0.76	0.71	0.66	0.62	0.55	0.48	0.40	0.33	0.26	0.20	0.14
(VAC) 5"	12.25	202.9	1.11	1.00	0.90	0.85	0.79	0.75	0.70	0.63	0.56	0.48	0.40	0.33	0.27	0.20
0 PSI	14.696	212.0	1.19	1.09	0.97	0.92	0.87	0.82	0.77	0.70	0.63	0.54	0.46	0.38	0.31	0.25
▶ .899	15.595	215.0	1.22	1.11	1.00	0.95	0.90	0.84	0.80	0.75	0.65	0.57	0.48	0.40	0.33	0.26
5	19.70	227.1	1.34	1.22	1.11	1.05	1.00	0.95	0.90	0.81	0.75	0.66	0.57	0.49	0.41	0.34
10	24.70	239.4	1.45	1.33	1.22	1.17	1.11	1.05	1.00	0.91	0.85	0.75	0.66	0.58	0.50	0.42
15	29.70	249.8	1.55	1.43	1.31	1.26	1.20	1.14	1.09	1.00	0.94	0.84	0.75	0.66	0.57	0.49
20	34.70	258.5	1.63	1.52	1.40	1.33	1.28	1.23	1.17	1.07	1.02	0.92	0.82	0.73	0.64	0.55
25	39.70	266.8	1.71	1.59	1.47	1.41	1.36	1.30	1.25	1.15	1.09	0.98	0.89	0.80	0.71	0.62
30	44.70	274.0	1.78	1.66	1.54	1.48	1.42	1.37	1.31	1.21	1.15	1.05	0.95	0.85	0.76	0.68
40	54.70	286.7	1.91	1.79	1.66	1.61	1.54	1.49	1.43	1.32	1.27	1.16	1.06	0.97	0.87	0.78
50	64.70	297.7	2.02	1.90	1.77	1.71	1.65	1.60	1.54	1.42	1.37	1.26	1.16	1.06	0.96	0.87
60	74.70	307.3	2.10	2.00	1.87	1.81	1.75	1.69	1.63	1.51	1.47	1.35	1.25	1.15	1.05	0.95
70	84.70	316.0	2.20	2.09	1.95	1.89	1.83	1.77	1.71	1.59	1.55	1.44	1.33	1.23	1.12	1.03
80	94.70	323.9	2.27	2.17	2.03	1.97	1.91	1.85	1.80	1.69	1.63	1.52	1.41	1.31	1.20	1.10
90	104.70	331.2	2.36	2.24	2.11	2.05	1.98	1.93	1.87	1.74	1.70	1.59	1.48	1.38	1.28	1.17
100	114.70	337.9	2.43	2.31	2.18	2.11	2.05	2.00	1.94	1.81	1.77	1.65	1.54	1.44	1.33	1.23
125	139.70	352.9	2.59	2.47	2.33	2.27	2.21	2.16	2.10	1.96	1.92	1.80	1.69	1.59	1.48	1.38
150	164.70	365.9	2.73	2.62	2.47	2.43	2.35	2.29	2.23	2.08	2.05	1.94	1.82	1.72	1.61	1.51
175	189.70	377.4	2.86	2.74	2.60	2.54	2.47	2.41	2.35	2.21	2.17	2.05	1.95	1.85	1.73	1.63
200	214.70	387.8	2.95	2.85	2.71	2.63	2.58	2.52	2.47	2.31	2.29	2.17	2.06	1.96	1.84	1.75

From Keenan and Keyes — Linear Interpolation. NOTE: Gauge pressure should be corrected for altitude.

Rate of pitch for steam ½"drop over 20-foot run.

DESIGN DATA

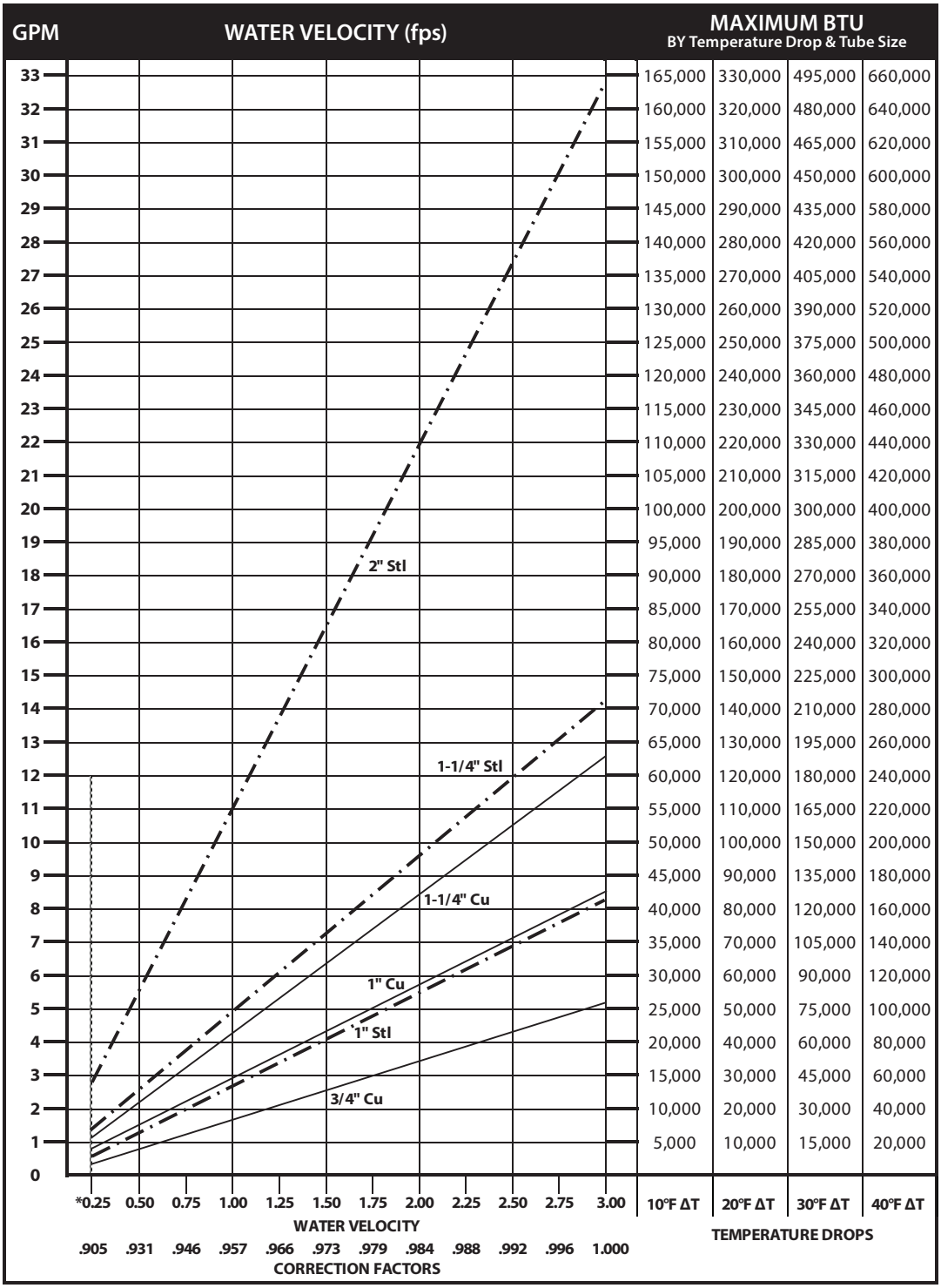

GPM	10°F ΔT	20°F ΔT	30°F ΔT	40°F ΔT
33	165,000	330,000	495,000	660,000
32	160,000	320,000	480,000	640,000
31	155,000	310,000	465,000	620,000
30	150,000	300,000	450,000	600,000
29	145,000	290,000	435,000	580,000
28	140,000	280,000	420,000	560,000
27	135,000	270,000	405,000	540,000
26	130,000	260,000	390,000	520,000
25	125,000	250,000	375,000	500,000
24	120,000	240,000	360,000	480,000
23	115,000	230,000	345,000	460,000
22	110,000	220,000	330,000	440,000
21	105,000	210,000	315,000	420,000
20	100,000	200,000	300,000	400,000
19	95,000	190,000	285,000	380,000
18	90,000	180,000	270,000	360,000
17	85,000	170,000	255,000	340,000
16	80,000	160,000	240,000	320,000
15	75,000	150,000	225,000	300,000
14	70,000	140,000	210,000	280,000
13	65,000	130,000	195,000	260,000
12	60,000	120,000	180,000	240,000
11	55,000	110,000	165,000	220,000
10	50,000	100,000	150,000	200,000
9	45,000	90,000	135,000	180,000
8	40,000	80,000	120,000	160,000
7	35,000	70,000	105,000	140,000
6	30,000	60,000	90,000	120,000
5	25,000	50,000	75,000	100,000
4	20,000	40,000	60,000	80,000
3	15,000	30,000	45,000	60,000
2	10,000	20,000	30,000	40,000
1	5,000	10,000	15,000	20,000
0				

*Do not design below .25 fps.

DYNAMIC FORMULAS

$$BTU = GPM \times 500 \times TD$$

$$GPM = \left(\frac{BTU}{500}\right) \div TD$$

$$TD = \left(\frac{BTU}{500}\right) \div GPM$$

Pressure Drop at Given Water Velocities (Feet of Water per 100 ft. of pipe) based on Hazen - Williams calculation

Nominal Pipe Size	Water Velocity (ft/sec)											
	0.25	0.50	0.75	1.00	1.25	1.50	1.75	2.00	2.25	2.50	2.75	3.00
3/4" Copper	0.06	0.20	0.42	0.72	1.09	1.53	2.04	2.61	3.25	3.95	4.71	5.53
1" Copper	0.04	0.15	0.32	0.54	0.81	1.14	1.52	1.94	2.42	2.94	3.50	4.11
1 1/4" Copper	0.03	0.12	0.25	0.43	0.64	0.90	1.20	1.54	1.92	2.33	2.78	3.26
1" Steel	0.04	0.15	0.32	0.54	0.81	1.14	1.52	1.95	2.42	2.94	3.51	4.12
1 1/4" Steel	0.03	0.11	0.23	0.40	0.60	0.84	1.12	1.44	1.79	2.17	2.59	3.05
2" Steel	0.02	0.07	0.14	0.25	0.37	0.52	0.69	0.89	1.10	1.34	1.60	1.88

DESIGN DATA

GUARANTEED WORKING PRESSURES

1" IPS — 780 at Temperatures up to 650˚F.
1-1/4" IPS — 660 at Temperatures up to 650˚F.
2" IPS — 405 at Temperatures up to 650˚F.
1-1/4" CU — 194 at Temperatures up to 300˚F.
1" CU 204 at Temperatures up to 300˚F.
3/4" CU 218 PSI at Temperatures up to 300˚F.

MAXIMUM PRESSURES AT OTHER TEMPERATURES ARE AVAILABLE UPON REQUEST.

Pipe Water Capacities and Quantities Circulated at Velocity of 3 Feet Per Second

Nominal Pipe Size	Pipe I.D. (inches)	Gals Per Lin. Ft.	GPM @ 3' per sec Velocity
3/4" Copper	0.835	0.028	5.12
1" Copper	1.077	0.047	8.52
1 1/4" Copper	1.315	0.071	12.70
1" Steel	1.075	0.047	8.49
1 1/4" Steel	1.395	0.079	14.29
2" Steel	2.115	0.183	32.85

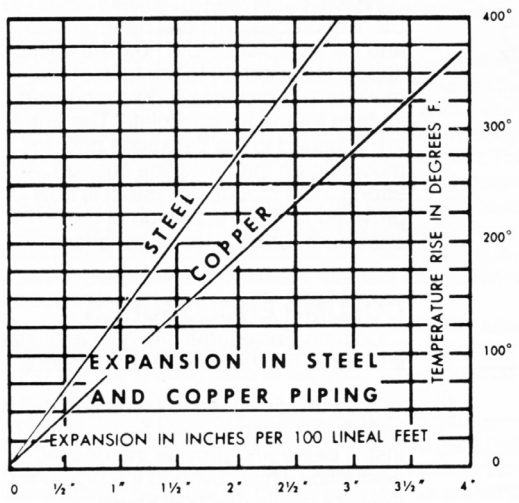

Glycol Correction Factors

Fluid Temperature 200°F

% Solution	Ethylene Glycol	Propylene Glycol
20	.952	.988
30	.921	.968
40	.888	.943
50	.852	.912

Fluid Temperature 180°F

% Solution	Ethylene Glycol	Propylene Glycol
20	.946	.982
30	.913	.961
40	.879	.934
50	.842	.902

Fluid Temperature 140°F

% Solution	Ethylene Glycol	Propylene Glycol
20	.934	.97
30	.898	.946
40	.861	.916
50	.821	.881

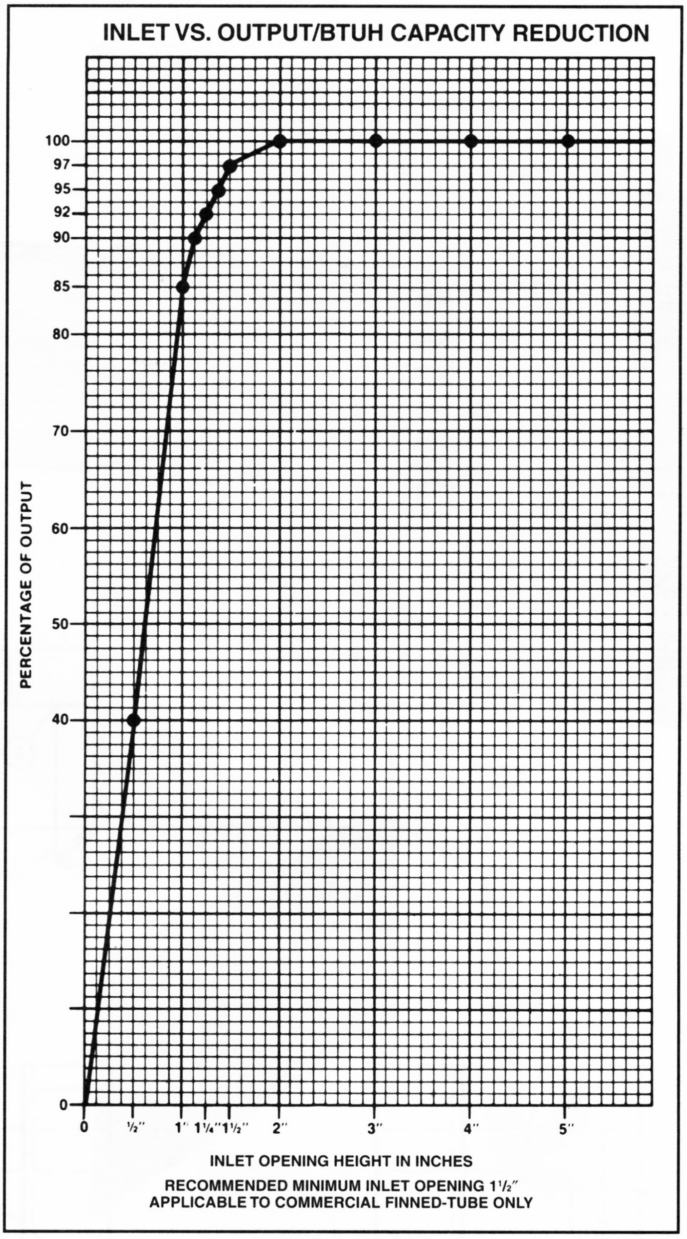

ALTITUDE FACTORS

Approximate factors for convective heat value at varying altitudes

Altitude	Ferrous Units	Copper Alum. Units
Sea Level	1.000	1,000
1,000 ft.	.984	.969
2,000 ft.	.968	.938
3,000 ft.	.952	.908
4,000 ft.	.936	.878
5,000 ft.	.920	.850
6,000 ft.	.904	.822
7,000 ft.	.889	.795
8,000 ft.	.874	.768
9,000 ft.	.859	.743
10,000 ft.	.844	.718
15,000 ft.	.771	.603
20,000 ft.	.703	.502